INSTRUCTIONS

MILO COT / BED

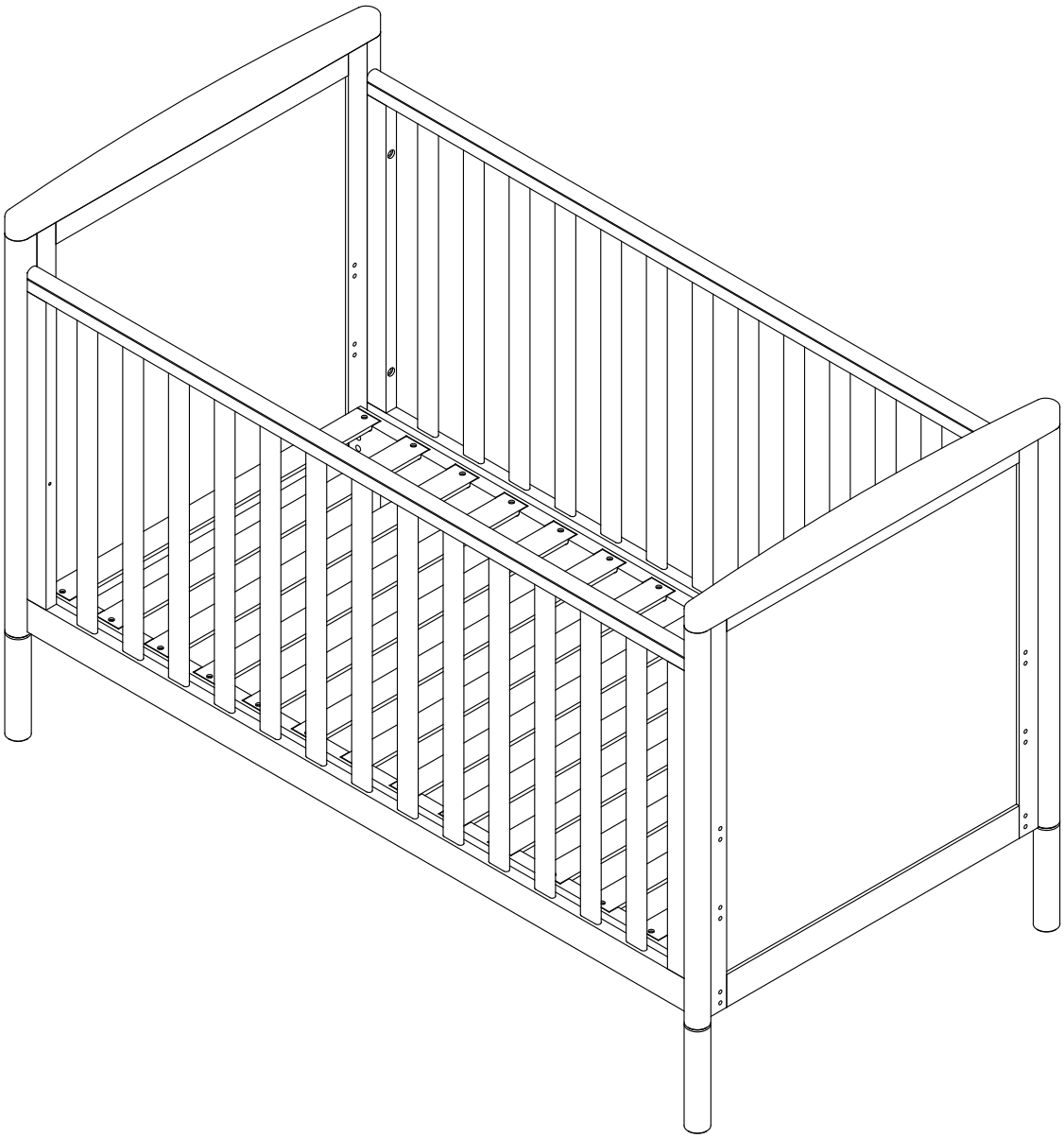

MILO: V2/21
Babymore Ltd.

Babymore
more for your baby

x1 <30m

IMPORTANT: READ CAREFULLY AND RETAIN FOR FUTURE REFERENCE

INSTRUCTIONS FOR SAFE USE

The correct use and maintenance of your cot/bed will ensure long and trouble free use. Please ensure everyone use your cot/bed know how to use it. The safety of your child is your responsibility.

- WARNING: Be aware if the risk of open fires and other sources of strong heat, such as electric bar fires, gas fires, etc. in the near vicinity of the cot.
- WARNING: Do not use the cot/bed if any part is broken, torn or missing and use only spare parts approved by Babymore.
- WARNING: Do not leave anything in the cot or place the cot close to another product which could provide a foothold or present a danger of suffocation or strangulation, e.g. strings, blind/curtain cords, etc.
- WARNING: Do not use more than one mattress in the cot.
- WARNING: When converted to a child's bed, do not place this bed near heat sources, windows and other furniture.
- The lowest base position is the safest. Once your child is old enough to sit up unaided the base should be used in the lowest position only.
- If your leave the child unattended in the cot, always make sure that the movable side is closed.
- The thickness of the mattress chosen shall be such that the internal height (surface of the mattress to the upper edge of the cot frame) is at least 500mm in the lowest position of the bed base and at least 200mm in the highest position of the bed base.
- Do not use more than one mattress in the cot.
- We recommend the use of a mattress minimum size of 70 cm by 140 cm for this cot. With a thickness not exceeding 10cm. the length and width of mattress shall be such that the gap between the mattress and the sides and ends does not exceed 30mm.
- Children are likely to play, bounce, jump and climb on beds, therefore the child's bed should not be placed too close to other furniture or windows, an should be placed either tight to any wall or have a gap of 300mm between the wall and the side of the bed.
- Please ensure that all assembly fittings always be tightened properly before use. And fittings should be checked regularly and tightened as necessary.
- The cot is only ready for use, when the locking mechanism(s) are engaged. Check the mechanism(s) is fully engaged before use.
- Your cot/bed may be cleaned with a damp cloth. Never use bleach or harsh abrasives.
- To prevent injury from falls, once the child is able to climb out of the cot, the cot should no longer be used for that child.
- This cot bed is intended for children aged from birth to 4 years approximately.
- The cot conforms to BS EN 716: 2017. When converted to bed, it conforms to BS 8509:2008+A1:2011.

Thank you for purchasing Babymore If you need assistance, spare parts or you are unhappy with the goods

Call : **020 3475 5588** Or email us at **customerservices@babymore.co.uk**

Improper assembly can result in damage to your furniture or cause harm. Proper assembly is critical to safe end result. Please read all instructions before assembly and keep for future use.

BEFORE ASSEMBLY

- Read the instruction thoroughly before attempt assembly.
- Unpack all the parts and identify against the components and fittings lists.
- Do not discard any packaging until you are sure all the parts and fittings.
- If any part/s missing or damaged or incorrect, contact customer services.
- Construction is easier with help of another person, in the room of use, on soft clean level floor.
- Follow step by step construction stages.

FITTINGS

Item	Description	Qty	Item	Description	Qty
A	**Bolts-55mm**	**12**	**B**	**Barrel nut**	**8**
	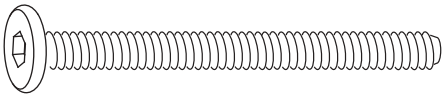			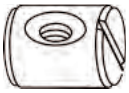	
C	**Bolts-25mm**	**8**	**D**	**Lower Pin**	**2**
	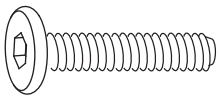				
E	**Upper Pin**	**2**	**F**	**Allen key**	**1**
	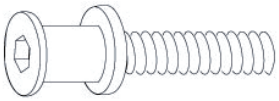				

COMPONENTS

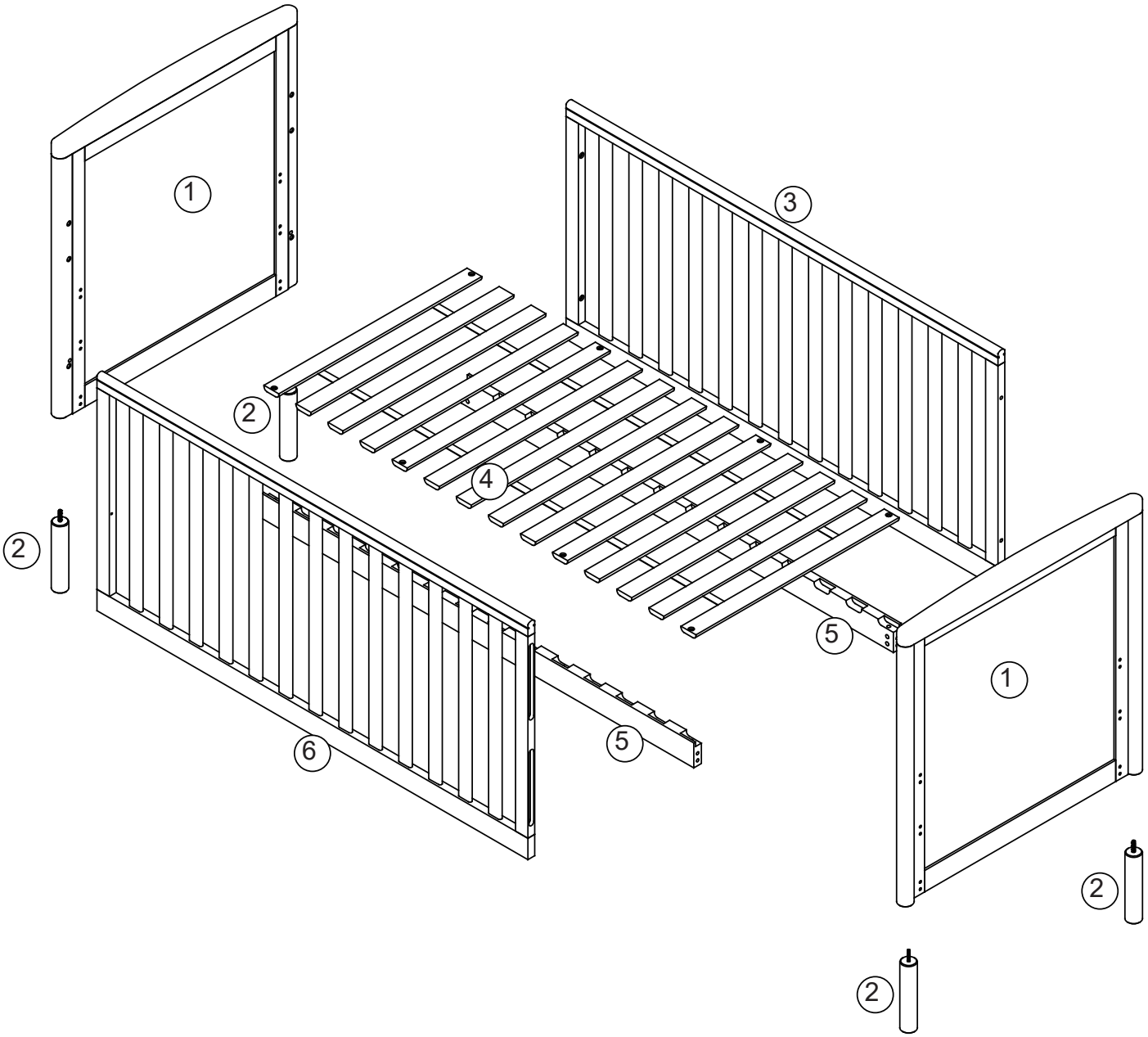

Item	Description	Qty
1	Cot End Panel	2
2	Foot	4
3	Fixed Side	1
4	Base Slat	1
5	Base Support Bar	2
6	Drop Side	1

Use cot bed in the correct mode

Make sure yours cot bed is on the correct setting, and check regularly to avoid any injuries.

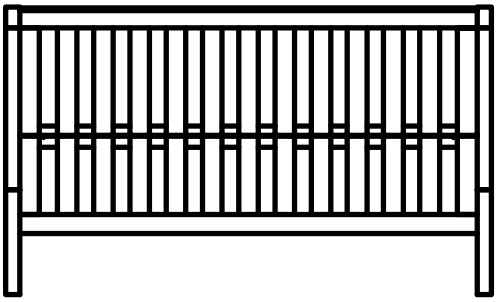

Top base position

The highest position is normally for first 3 months, or until baby able to roll over unaided.
(approx. birth to 3 months)

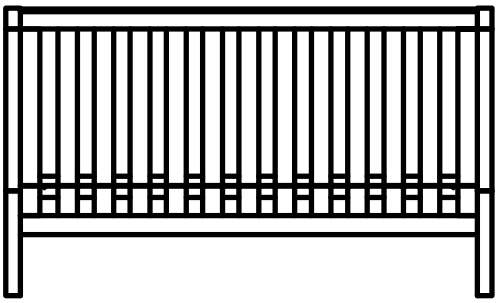

Middle base position

Adjust base to middle position, as soon as baby able to roll over unaided.
(approx. 3 months - 8 months)

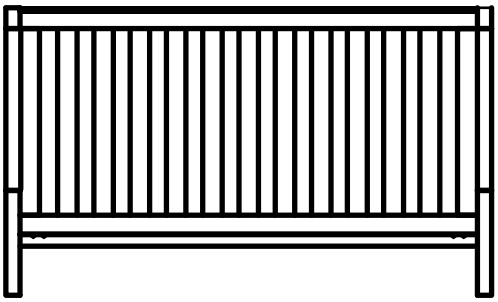

Lowest base position

The lowest position is the safest, and should always be used as soon as your baby is old enough to sit up unaided.
(usually about 8 months old)

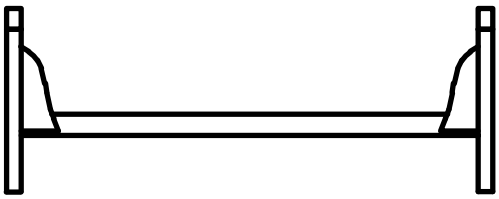

Change Cot to Bed

Change the cot into a bed when your baby can reach over the top rail, or shows any signs of trying to climb out.
(approx. 9 months - 18 months)

ASSEMBLING THE COT

Step 1

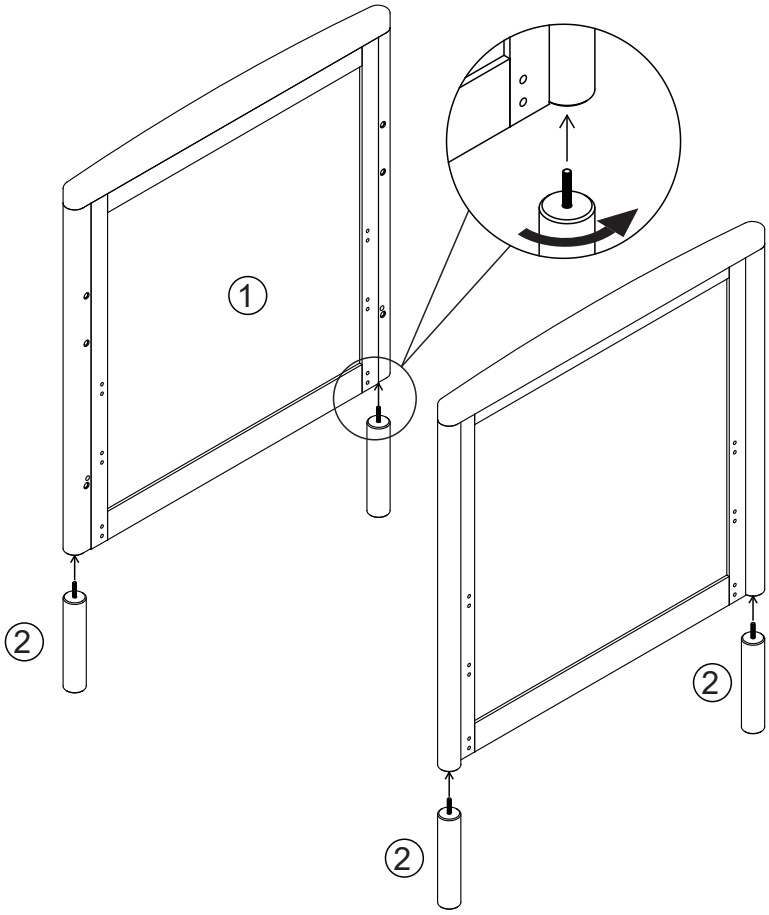

Step 2

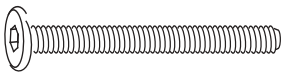

A/ Bolts 55mm x 8

B / Barrel Nut x 8

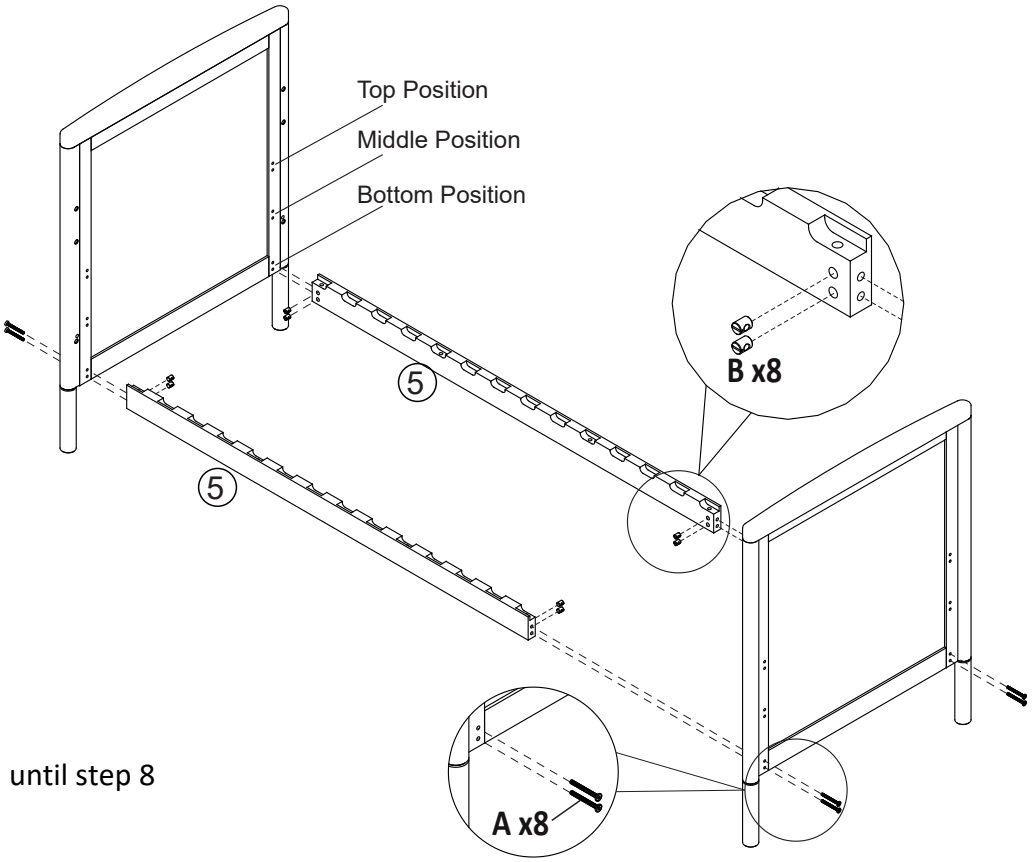

Do not fully tighten until step 8

ASSEMBLING THE COT

Step 3

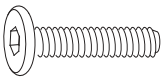

C / Blots 25mm x 8

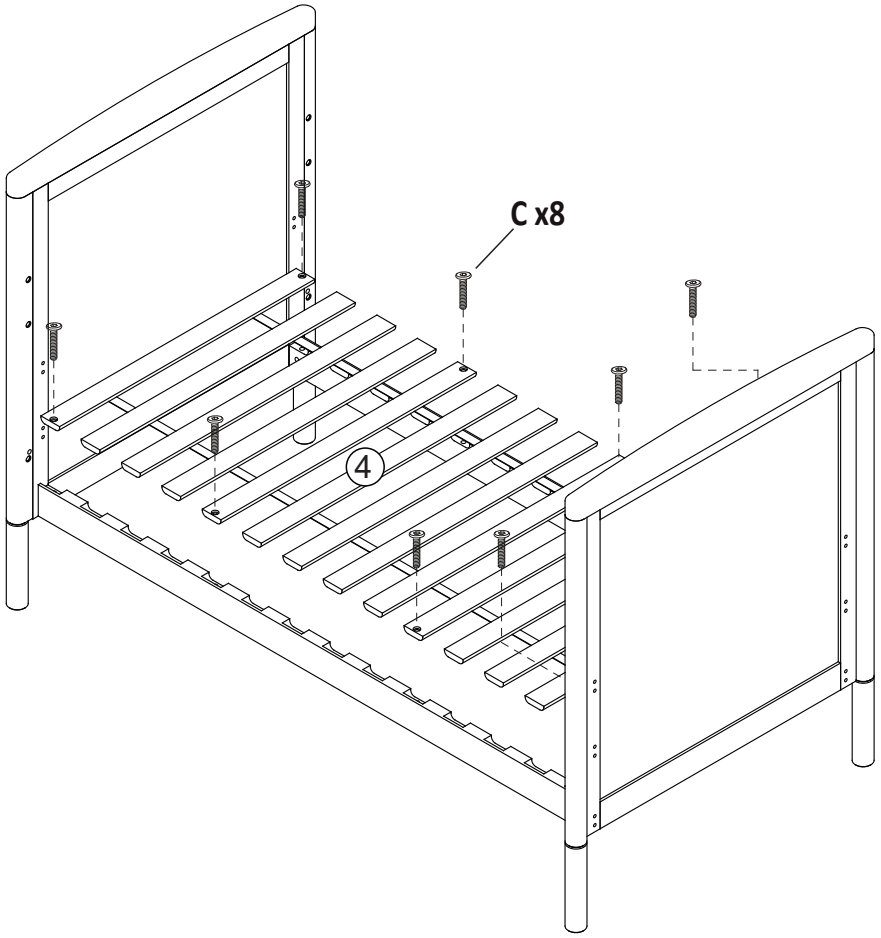

Step 4

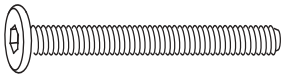

A / Bolts 55mm x 4

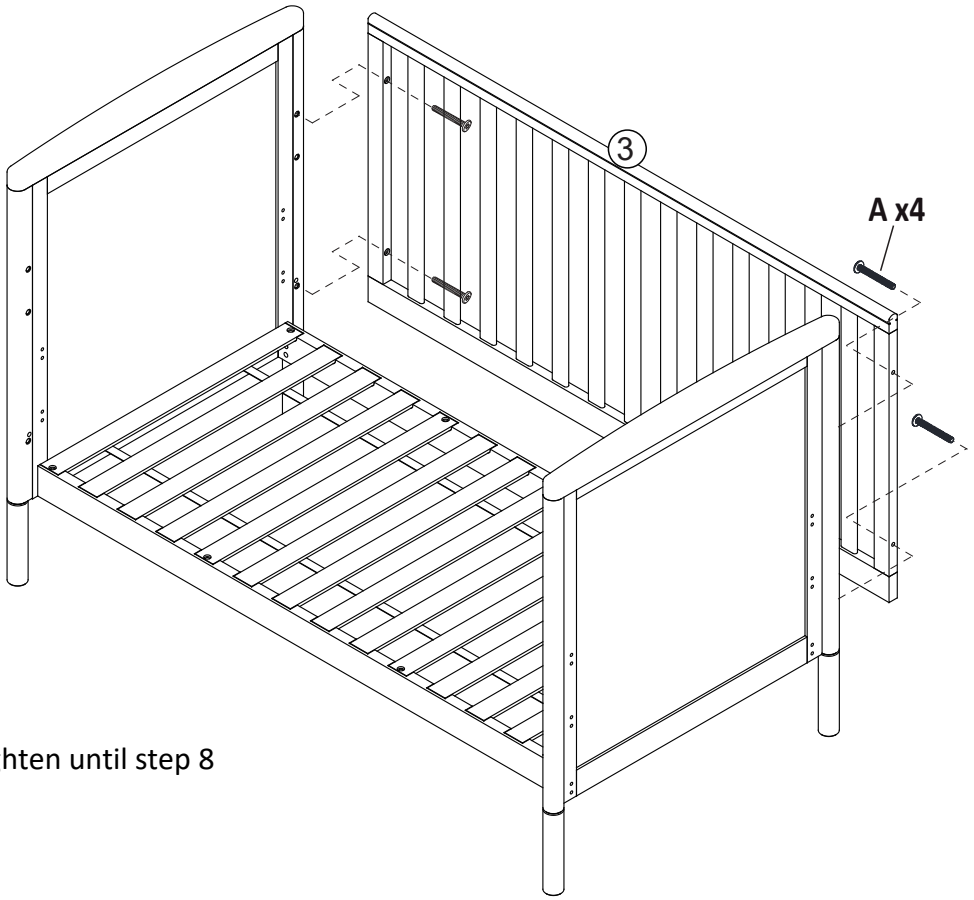

Do not fully tighten until step 8

ASSEMBLING THE COT

Step 5

D / Lower Pin x2

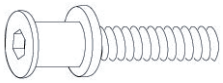

E / Upper Pin x2

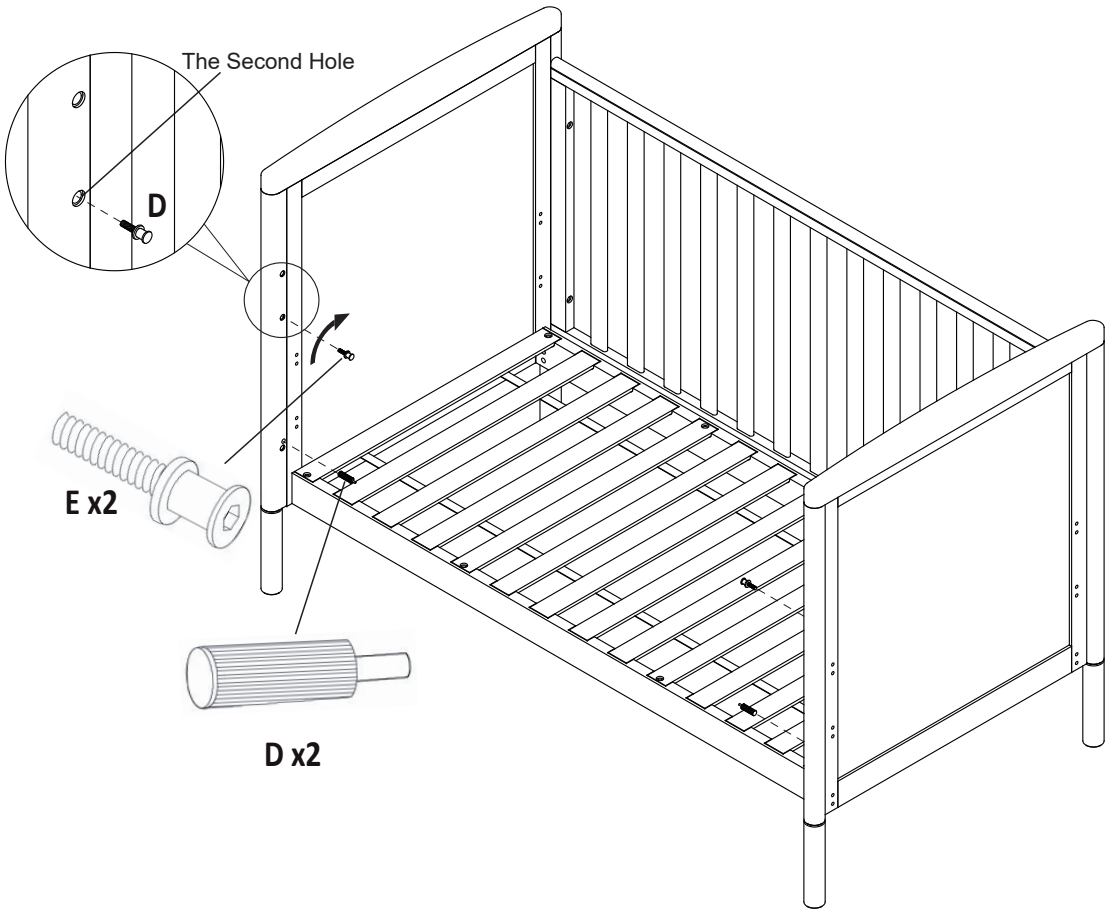

Step 6

IMORTANT:
Ensure correct way (Outside/Inside) of Dropside Panel.

"PUSH" label face outside

Align and insert top gilde pin into top recess of dropside panel, if required, loosen the bolts of step 2 and step 3, to create space.

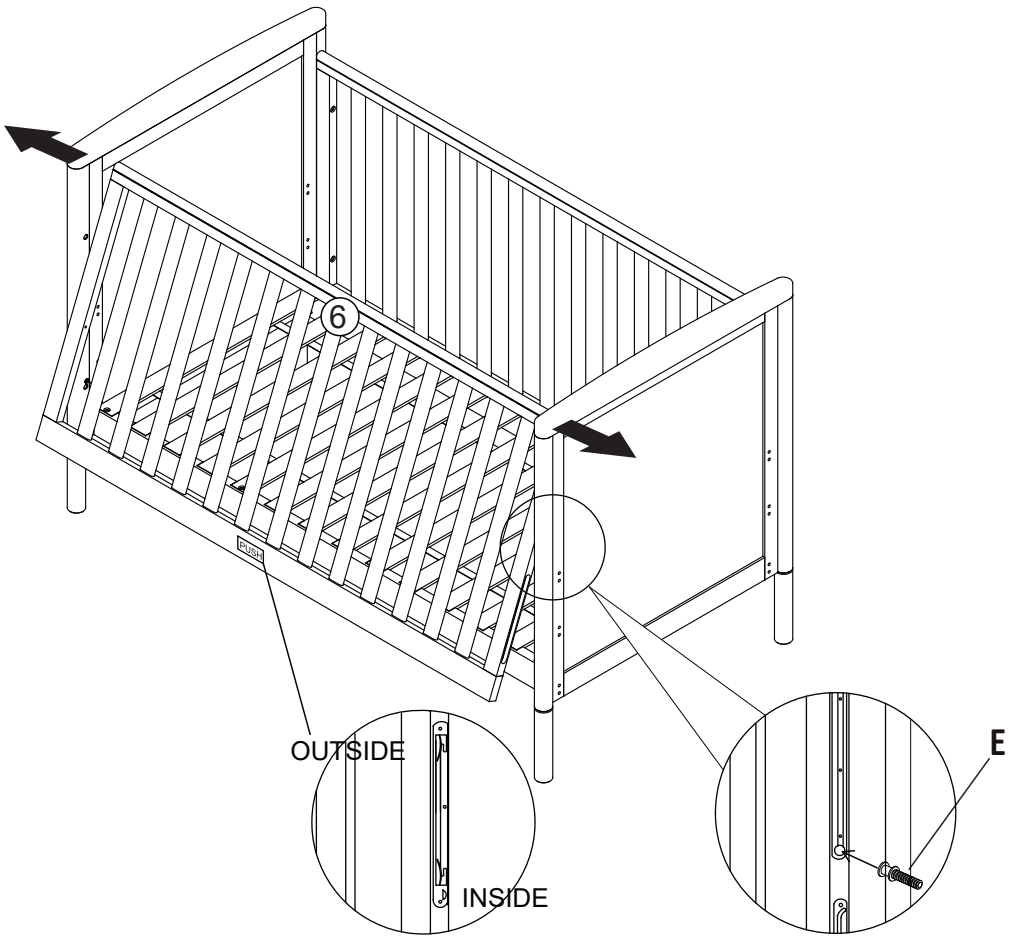

ASSEMBLING THE COT

Step 7

Rotate the bottom of dropside panels, align lower recess ot the lower pins of cot end,

Push down the top of retractable pin, insert it to lower recess.

IMPORTANT:
Ensure both pins insert into the long groove of recess.

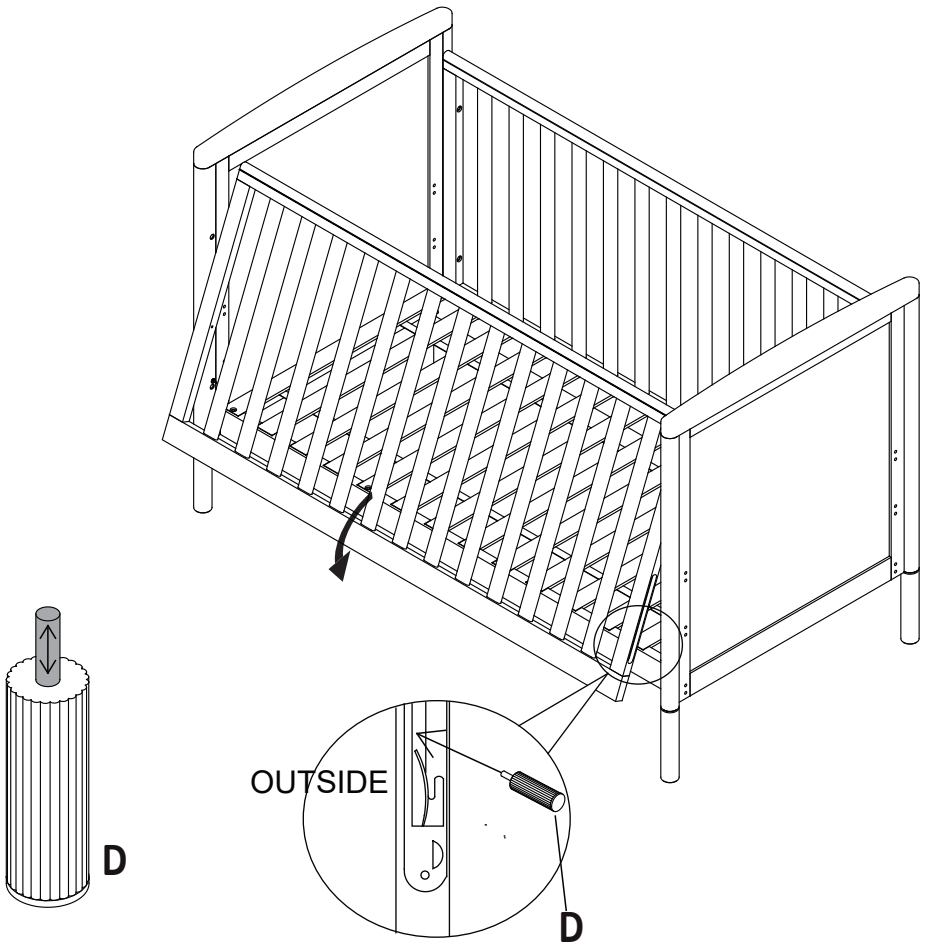

Step 8

FULL TIGHTEN ALL BOLTS.

DO NOT OVER TIGHTEN.

Allow 3-5mm even gap between drop side and cot ends.

COT READY FOR USE

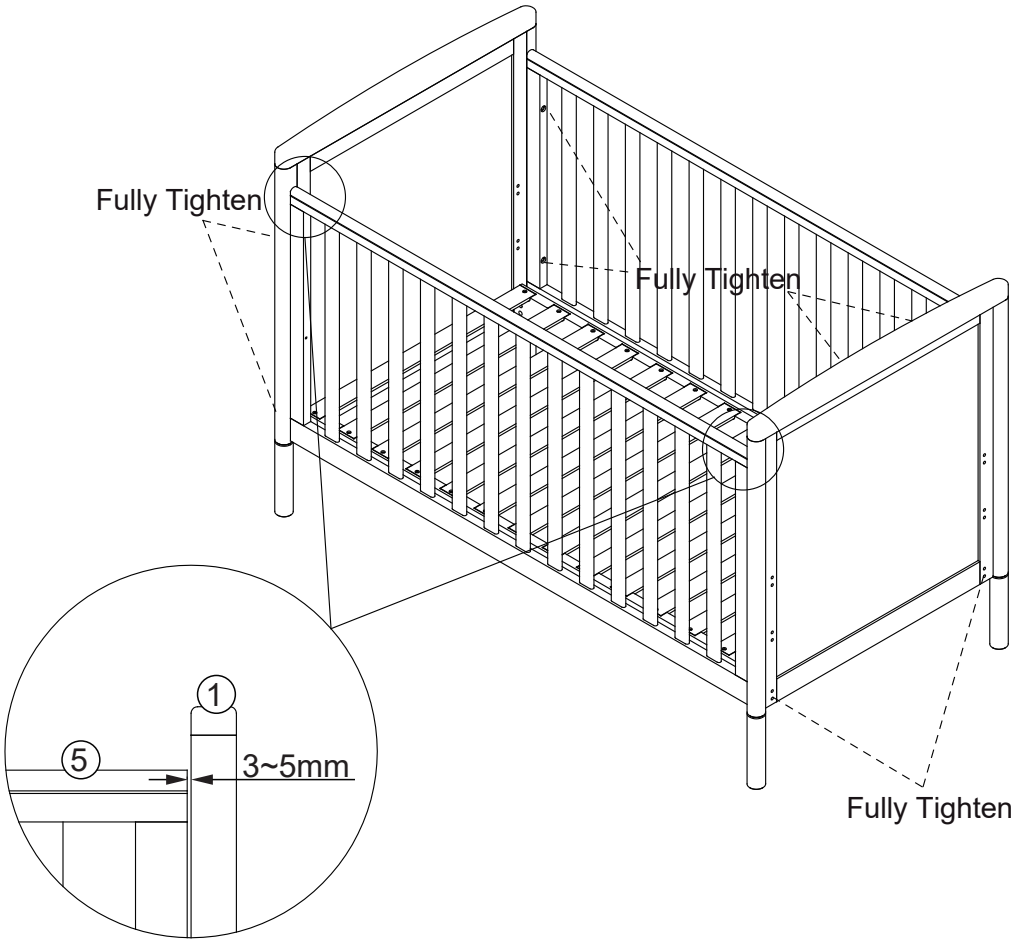

ASSEMBLING THE COT

Step 9

USE THE DROP SIDE

Lift the drop side to top, hold, while use your leg push lower centre of panel inward, then allow the panel to slide down / up until it clicks into loscking position.

ALWAYS VERIFY BOTH ENDS LOCKED INTO RAISED POSITION, WHEN A CHILD IN THE COT.

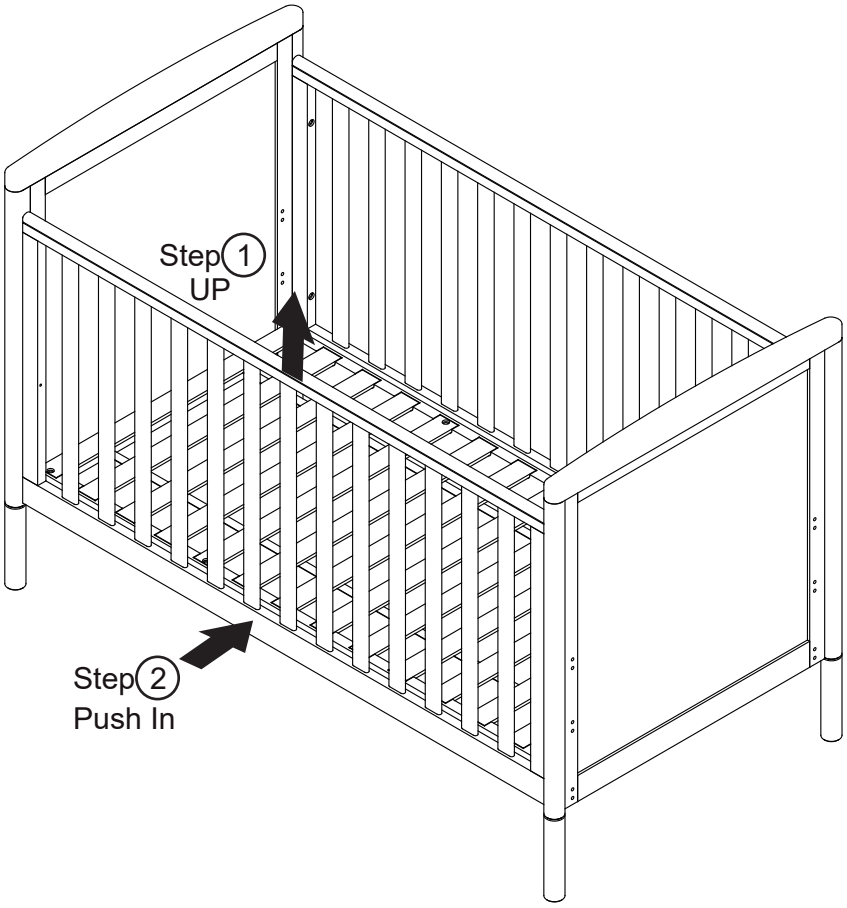

CONVERT TO DAY / BED

Step 1

E /Allen Key x1

Use Allen Key to remove lower pin out of recess.

Reverse assembly step 6 and step 5 to remove the drop side.

Loosen up the connection botls for spae of remove the panel.

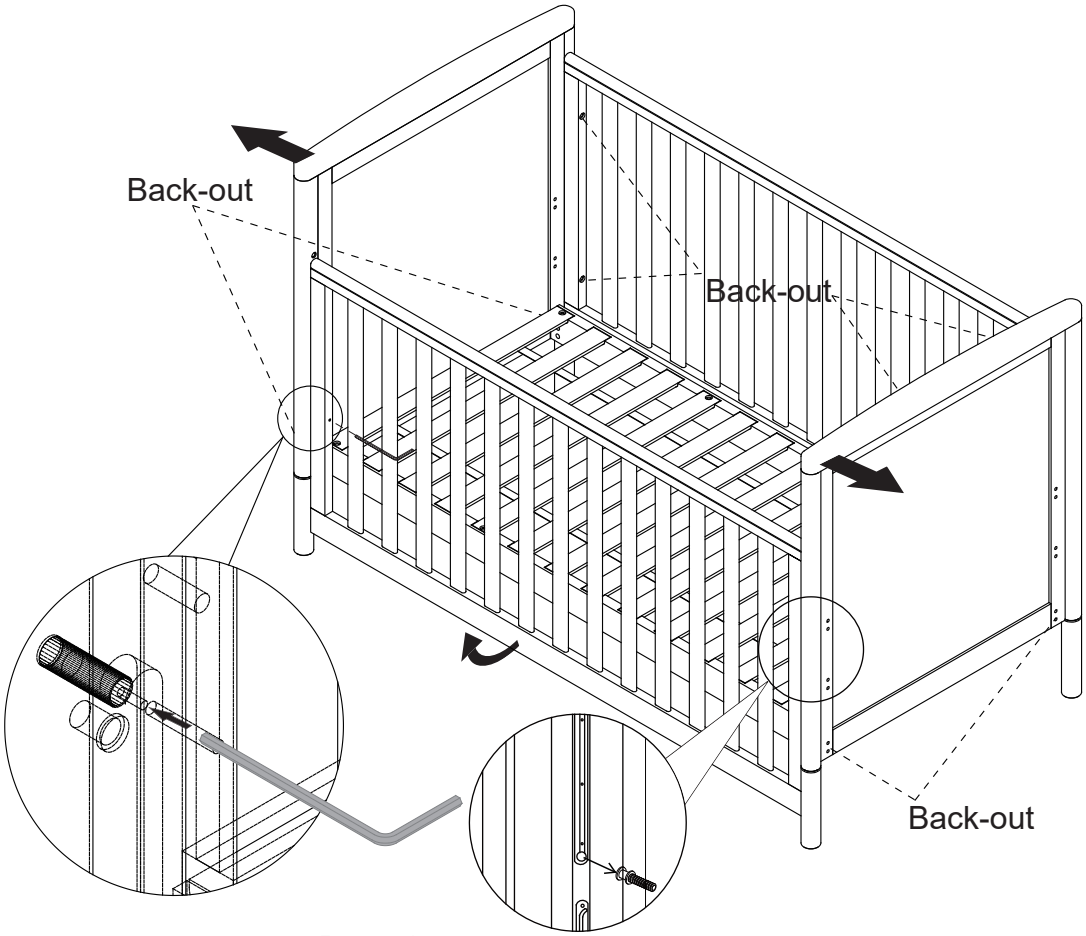

CONVERT TO DAY / BED

Step 2

Remove cot feet and Upper pins

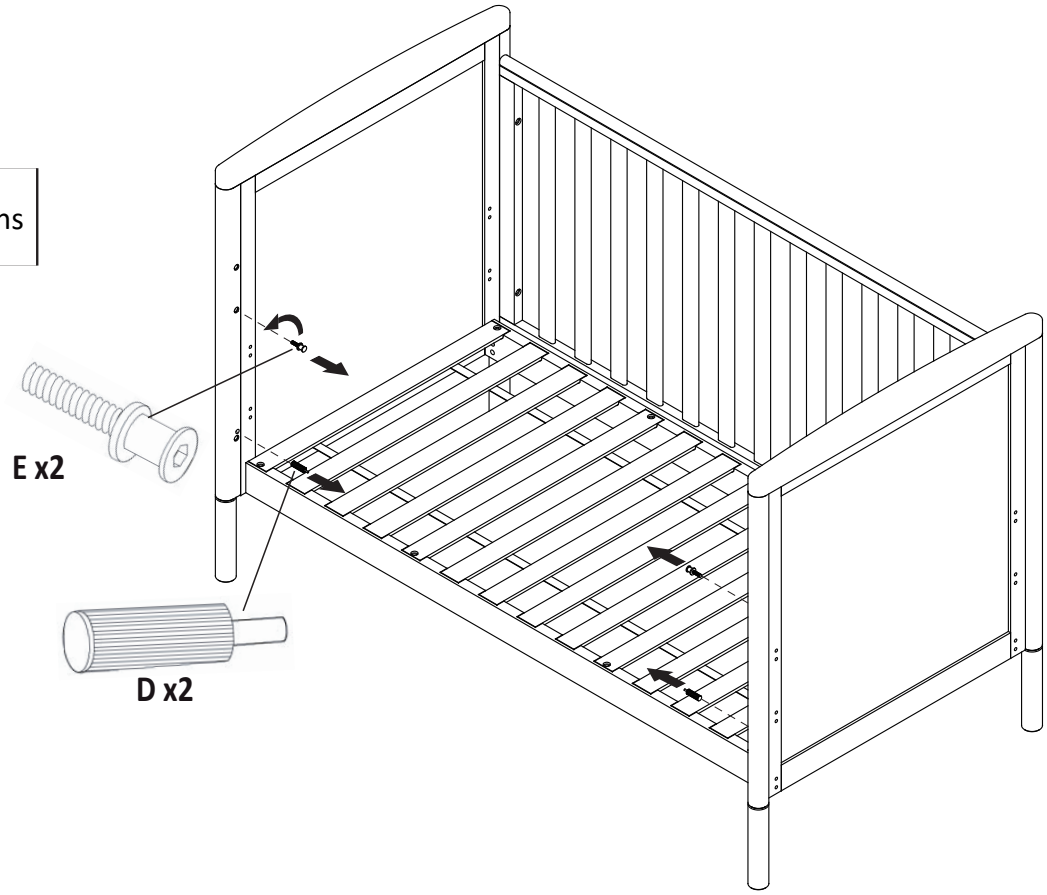

Step 3

Change the base to middle position.

BED READY FOR USE

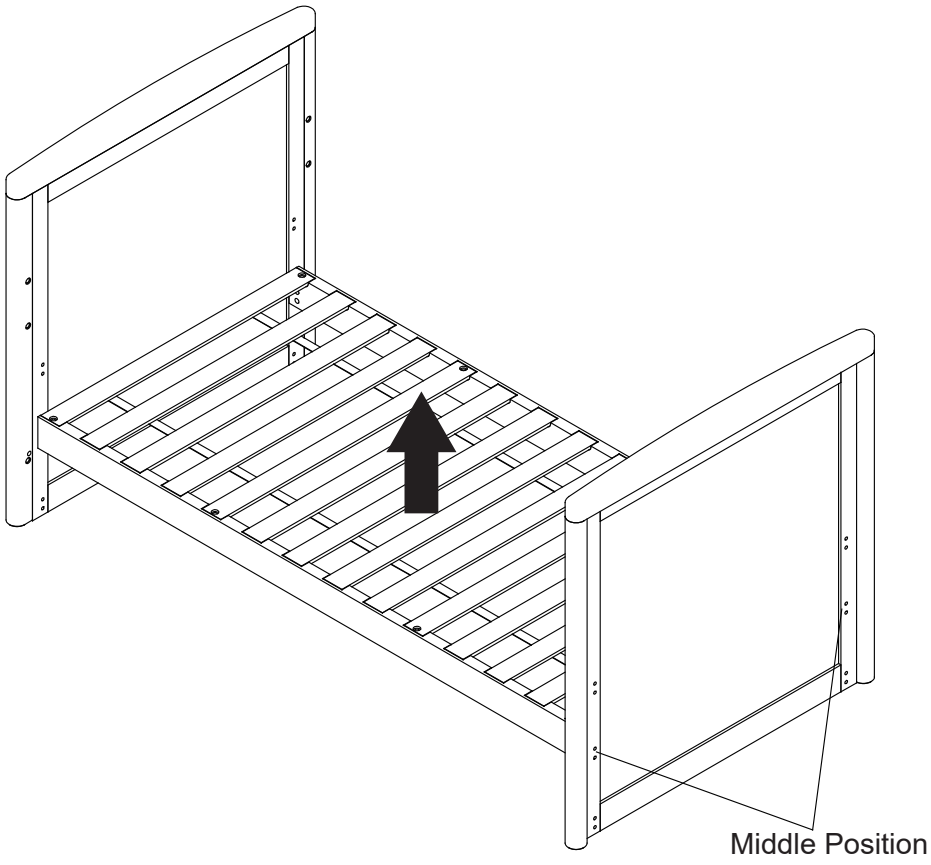

Due to constant update and improvements, some components may occasionally differ slightly from the diagrams show in these instructions.
Any spare components should only be thrown away after you have fully constructed your product.
After disassembly, it is important to retain all metal fixings and components should the product be returned to cot or bed mode in future.
We reserve the right to change the specifications of any piece of product without prior notice.

Care & Maintenance

To preserve the hand crafted quality of furniture, we recommend using a cotton cloth and a non-toxic cleaner. Periodic use of furniture polish will maintain the good looks of your furniture. Scuff marks may be removed with a damp cloth.

SIX MONTHS LIMITED WARRANTY

We will replace any missing parts at the time of purchase or any defective item within 6 months period from the date of original purchase. Please keep your receipt so that we may process your warranty request. This warranty only covers new units with original packaging and ownership, and is not transferable. It does not cover any used, second hand or demo models.
This Warranty does not cover any damaged or defective parts that result from installation and assembly, normal wear and tear, abuse, negligence, improper use, incidental damages or alteration to the finish, part or fitting of the cot. This in no way affects your statutory rights.
Each Babymore item is a unique piece, made of high quality wood and material. Due to the hand crafted nature of our products and our use of natural material, each piece is unique and may contain irregular qualities, there will occasionally be natural markings, minuscule burrs, or slight discolorations. These characteristics are inherent in the material and are not considered manufacturing defects. Because of this, the merchandise will be considered normal and do not merit replacement.

Thank you for purchasing Babymore If you need assistance, spare parts or you are unhappy with the goods Call : 020 3475 5588 Or email us at customerservices@babymore.co.uk
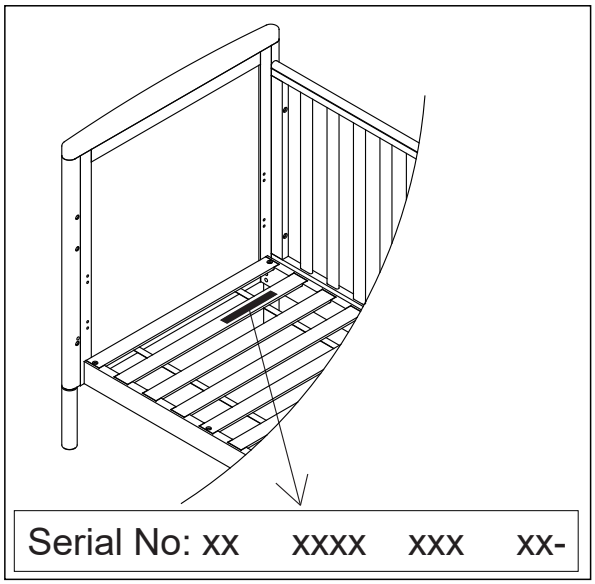
Serial Number location: Label attached on slat of mattress base.